Bei Warenrücksendungen auf Grund von Beanstandungen wenden Sie sich bitte an unser Service Center:

Merten GmbH & Co. KG, Lösungen für intelligente Gebäude, Service Center, Fritz-Kotz-Straße 8, Industriegebiet Bomig-West, D-51674 Wiehl
Telefon: +49 2261 702-204
Telefax: +49 2261 702-136
E-Mail: servicecenter@merten.de
Internet: www.merten.de

V6822-581-00 10/05

Bei technischen Fragen wenden Sie sich bitte an unsere InfoLine:

Telefon: +49 1805 212581* oder +49 800 63783640
Telefax: +49 1805 212582* oder +49 800 63783630
E-Mail: infoline@merten.de

*kostenpflichtig / fee required

merten

Analogaktor REG-K/4fach	**682291**	**D**
Analog actuator REG-K/4-gang (Application description attached)	**682291**	**GB**
Analoge actor REG-K/4-voudig	**682291**	**NL**
Actuador analógico REG-K/4-gang	**682291**	**E**

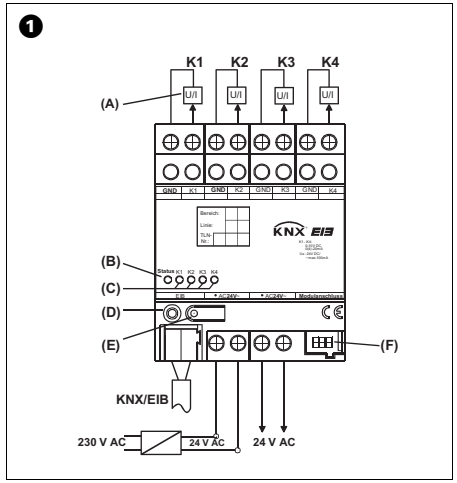

merten

Zu Ihrer Sicherheit

Achtung
Einbau und Montage elektrischer Geräte dürfen nur durch eine Elektrofachkraft erfolgen. Dabei sind die geltenden Unfallverhütungsvorschriften zu beachten. ·
Bei Nichtbeachtung der Installationshinweise können Brand oder andere Gefahren entstehen.·
Die Verwendung anderer, als von Merten zugelassener Verbindungsleitungen ist nicht gestattet und kann die elektrische Sicherheit sowie die Funktionalität des Systems negativ beeinflussen.

·Schließen Sie keine EVG oder elektronischen Trafos mit 1-10 V-Steuereingang an die Ausgänge an!
·Schließen Sie keine externen Spannungen an die Ausgänge an. Angeschlossene Komponenten müssen eine sichere Trennung zu anderen Spannungen gewährleisten.
Verbinden Sie die Klemmen GND nicht mit den gleichnamigen Klemmen eines Analogausgangsmoduls (Zerstörungsgefahr!).

Systeminformation

Dieses Gerät ist ein Produkt des instabus-KNX/EIB-Systems und entspricht den KNX-Richtlinien. Detaillierte Fachkenntnisse durch instabus-Schulungen werden zum Verständnis vorausgesetzt. Die Funktion des Gerätes ist softwareabhängig. Detaillierte Informationen, welche Software geladen werden kann und welcher Funktionsumfang sich damit ergibt, sowie die Software selbst sind der Produktdatenbank des Herstellers zu entnehmen.Planung, Installation und Inbetriebnahme des Gerätes erfolgen mit Hilfe einer KNX-zertifizierten Software. Die Produktdatenbank sowie die technischen Beschreibungen finden Sie stets aktuell im Internet unter www.merten.de.

Funktion

- Der EIB Analogaktor verfügt über 4 Analogausgänge und wandelt EIB-Telegramme (1-Byte- und 2-Byte-) in analoge Ausgangssignale um.
- Diese analogen Ausgangssignale ermöglichen es Aktoren der Heizungs-, Klima- und Lüftungstechnik, ihre Ausgangsgrößen aufgrund von Businformationen anzupassen, und an Regelprozessen teilzunehmen.
- Die Ausgänge werden durch die Software auf Spannungs- oder Stromsignale parametriert.
  Spannungsausgänge: 0...1 V, 0...10 V
  Stromausgänge: 0...20 mA 4...20 mA
- Spannungsausgänge werden auf Kurzschluss überwacht.
- Der Ausgangszustand wird durch Status-LED angezeigt.

- Mit Hilfe des Analogaktormoduls 4fach , Art.-Nr. 682292, kann die Anzahl der analogen Ausgänge um 4 auf 8 erweitert werden. Der Anschluss erfolgt über einen Systemstecker.
- Die Ausgangsgrößen können zwangsgeführt werden.
- Nicht benötigte Ausgänge lassen sich abschalten.

Montage

Achtung
Die Verwendung anderer als von Merten zugelassener Verbindungsleitungen ist nicht gestattet und kann die elektrische Sicherheit sowie die Funktionalität des Systems negativ beeinflussen.

Aufschnappen auf Hutprofilschiene 35 x 7,5 mm nach DIN EN 50022.

Der Anschluss eines Analogaktormoduls erfolgt ausschließlich mit einem 6-poligen Systemstecker (liegt dem Analogaktormodul bei).

Der EIB Analogaktor benötigt zum Betrieb eine externe 24-V-Spannungsversorgung, z. B. Spannungsversorgung REG, AC 24 V/1 A, Art.-Nr 663629. Diese kann auch ein angeschlossenes Analogaktormodul oder weitere Geräte versorgen.

Für einen komfortablen Anschluss sind die Klemmen für die Spannungsversorgung doppelt vorhanden und intern miteinander verbunden (Kennzeichnung durch Punkt).

Anschließbare Analog-Aktoren

Schließen Sie keine EVG oder elektronischen Trafos mit 1 -10V-Steuereingang an die Ausgänge an!·
Schließen Sie keine externen Spannungen an die Ausgänge an. Angeschlossene Komponenten müssen eine sichere Trennung zu anderen Spannungen gewährleisten.
Die Klemmen GND dürfen nicht mit den gleichnamigen Klemmen eines Analogaktormoduls verbunden werden (Zerstörungsgefahr!).

- Stromausgänge dürfen mit max. 500 Ω belastet werden.·
- Spannungsausgänge müssen mit min. 1 kΩ belastet werden.·

- Die Klemmen GND der Ausgänge K1...K4 sind intern miteinander verbunden.·
- Bei Kurzschluss eines Spannungsausgangs zwischen K1...K4 und GND wird der jeweilige Ausgang abgeschaltet.

Anschluss, Bedienelemente (Bild ❶)

GND:	Bezugspotential für Ausgänge K1...K4
K1 ... K4:	Analogausgänge
KNX/EIB:	KNX/EIB-Anschlussklemme
24 V AC:	externe Versorgungsspannung
(A):	Analog-Aktoren Geräte mit analoger Schnittstelle z. B. analoge Stellglieder etc.
(B):	Status-LED, dreifarbig (rot, orange, grün)
(C):	Status-LED der vier Analogausgänge (gelb)
(D):	Programmier-LED
(E):	Programmier-Taste
(F):	Systemverbinder, 6-polig zum Anschluss eines Analogaktormoduls

Installation eines Analogaktormoduls

Bei der Installation eines Analogaktormoduls sind folgende Grundregeln zu beachten:

- Es kann max. ein Analogaktormodul angeschlossen werden.·
- Der Tausch eines Erweiterungsmoduls gegen eines vom selben Typ z. B. bei einem Defekt kann im laufenden Betrieb des Systems erfolgen (Modul spannungsfrei schalten!). Nach dem Tausch führt der Analogaktor nach ca. 25 s einen Reset durch. Dadurch werden alle Ausgänge des Analogaktors und der angeschlossenen Module neu initialisiert und in den Ursprungszustand versetzt. ·
- Das Entfernen oder Hinzufügen von Modulen ohne Anpassung der Projektierung und anschließendes Herunterladen in den Analogaktor ist nicht zulässig, da es zu Fehlfunktionen des Systems führt.

Inbetriebnahme

Nach dem ersten Einschalten führt der Analogaktor einen Modulscan durch (Status-LED: "Orange / Ein"). Da ein neues Gerät standardmäßig kein Projekt enthält, schaltet anschließend die Status-LED auf "Rot / Blinkt schnell".
Ein angeschlossenes Analogaktormodul signalisiert seine Betriebsbereitschaft, indem es seine Status-LED auf "Schnell blinkend" schaltet.
Nachdem ein Projekt in den Analogaktor geladen worden ist, schaltet die Status-LED auf "Grün / Ein"; das Modul schaltet seine Status-LED aus.

Status-LED

Gerätestatus (dreifarbig rot, orange, grün)

Aus	keine Spannungsversorgung
Orange / Ein	Modulscan durch Analogaktor
Orange / blinkt schnell	Scan Analogaktormodul
Rot / blinkt langsam	Fehler: Unterspannung an Modulanschluss
Rot / blinkt schnell	Fehler: kein Projekt / Fehler in Parametrierung,
Grün / blinkt langsam	Adressenvergabe, Modulscan abgeschlossen, Projektierung OK
LED Grün / blinkt schnell	Parameter Download in Modul
LED Grün / Ein	Modulscan abgeschlossen, alles OK

Langsam blinkend = 1/s; Schnell blinkend = 2/s

Ausgangssignale K1...K4 (gelb):
LED Aus: Ausgangssignal ist gleich Null

Technische Daten

Versorgung	
Versorgungsspannung:	24 V AC ±10 %
Stromaufnahme:	max. 308 mA
Spannung EIB:	24 V DC (+8 V / -3 V)
Leistungsaufnahme EIB:	typ. 150 mW
Umgebungstemperatur:	-5 °C bis +45 °C
Lager-/Transporttemp.:	-25 °C bis +70 °C
Feuchte Umgebung/Lager/ Transport:	max. 93% r. F., keine Betauung
Schutzart:	IP 20 nach DIN EN 60529
Einbaubreite:	4 TE / 70 mm
Gewicht:	ca. 180 g

Anschlüsse	
Ausgänge, Versorgung:	Schraubklemmen
eindrähtig	0,5 mm^2 bis 4mm^2
feindrähtig (o. Aderendhülse)	0,34 mm^2 bis 4 mm^2
feindrähtig (m. Aderendhülse)	0,14 mm^2 bis 2,5 mm^2
instabus EIB:	Anschluss- und Abzweigklemme
Analogaktormodul:	6-pol. Systemstecker
Analogausgänge	
Anzahl:	4
Bereiche:	0 … 1 V DC, 0 … 10 V DC, 0 … 20 mA DC, 4 … 20 mA DC
Impedanz Spannungsmessung:	> 1 kΩ
Impedanz Strommessung:	< 500 Ω

Versorgung Analogaktormodul:	24 V DC. über Systembus max.80 mA

Technische Änderungen vorbehalten.

Safety warnings

Attention:
Electrical equipment must be installed and fitted by qualified electricians only and in strict observance of the relevant accident prevention regulations.·
Failure to observe any of the installation instructions may result in fire and other hazards.·
The use of connecting cables other than those approved by Merten is not permitted and can have a negative effect on electrical safety and system functions.

Do not connect electronic ballasts or electronic transformers with 1-10 V control input to the outputs. ·
Do not connect external voltages to the outputs. Connected components must ensure safe separation from other voltages.·
Do not connect the GND terminals with terminals of the same designation in an analog actuator module (risk of irreparable damage).

System information

This device is a product of the instabus-KNX/EIB system and complies with KNX directives. Detailed technical knowledge obtained in instabus training courses is a prerequisite to proper understanding.
The functionality of this device depends upon the software. Detailed information on loadable software and attainable functionality as well as the software itself can be obtained from the manufacturer's product database.

Planning, installation and commissioning of the unit is effected by means of KNX-certified software.

An updated version of the product database and the technical descriptions are available in the Internet at www.merten.de.

Function

- The EIB analog actuator has 4 analog outputs and converts KNX/EIB-Telegramme (1-byte and 2-byte telegrams) into analog output signals. ·
- With these analog output signals, actuators used for heating, ventilation and air conditioning purposes are enabled to adapt their output variables in acc. with informations received from the bus and to be used within control processes.·
- The outputs are software-parameterized for voltage or current signals. :
  Voltage outputs: 0...1 V, 0...10 V
  Current outputs: 0...20 mA 4...20 mA
- The current inputs are monitored for wire breakage.·
- The output state is indicated by the status LED.

- With the 4-channel analog actuator module, Art.-Nr. 682292, the number of analog outputs can be increased by 4 outputs to 8 outputs. The device is connected by means of a system connector.·
- The output variables can be subject fo forced control.
- Non used outputs can be deactivated.

Installation

Safety warnings
The use of connecting cables other than those approved by Merten ist not permitted and can have a negative effect on electrical safety and system functions.

Snap the device onto a 35 x 7.5 top hat rail as per DIN EN 50022.

The device can only be connected to an analog output module by means of a 6-pole system connector (supplied with the analog output module).

The EIB analog actuator needs an external 24 V power supply for operation, e.g. the. power supply unit REG, AC 24 V/1 A, Art. No. 663629. This unit can also supply a connected analog actuator module or other devices.

For easy connection, there are two pairs of internally connected power supply terminals (marked by a dot).

Connectable analog actuators

Do not connect electronic ballasts or electronic transformers with 1-10 V control input to the outputs. ·
Do not connect external voltages to the outputs. Connected components must ensure safe separation from other voltages.
The GND terminals must not be connected with the terminals of the same designation of an analog actuator module (risk of irreparable damage!).

- Current outputs may be loaded with 500 Ω max.·
- Voltage outputs must be loaded with 1 kΩ min.·
- The GND terminals of outputs K1...K4 are internally connected.·

- In the event of a short-circuit between a voltage output K1...K4 and GND, the respective output is deactivated.

Connection, controls (Fig. ❶)

GND	reference potential for outputs K1...K4
K1 ... K4	analog outputs
KNX/EIB	KNX/EIB connecting terminal
24 V AC	external supply voltage

(A) analog actuators
devices with analog interface
e.g. analog controlling elements, etc.

(B) status LED, tri-coloured (red, orange, green)

(C) status LEDs of the four analog outputs (yellow)

(D) programming LED

(E) programming button

(F) system connector, 6-pole for connection of an analog actuator module

Installing an analog actuator module

Please observe the following basic rules when installing an analog actuator module:

- The device is designed for the connection of one analog actuator modulel maximum.
- An extension module can be replaced by one of the same type (e.g. in case of defect) while the system is in operation (disconnect voltage supply from module!). After the replacement, the analog actuator makes a reset after abt. 25 s. This action re-initializes all outputs of the analog actuator and of the connected modules and resets them to their original state. ·
- Removal or addition of modules without adapting the project and subsequent downloading into the analog actuator is not permitted as this will result in system malfunctions.

After initial activation, the analog actuator performs a module scan (status LED: "Orange / On "). As a new decive is not projected by default, the status LED thereafter switches to "Red / Flashing fast".

A connected analog actuator module signals its ready-for-operation status by switching its status LED to "Flashing fast".

After loading a project into the analog actuator the status LED switches to "Green / On"; and the module switches its status LED off.

Status LED

Device status (tri-coloured red, orange, green)

Off	no voltage supply
Orange / On	module scan by analog actuator
Orange / flashing fast	scan analog actuator module
Red / flashing slowly	fault: voltage at module connection too low
Red / flashing fast	fault: no project / fault in parameterization,
Green / flashing slowly	address allocation, module scan terminated, projecting OK
LED Green / flashing fast :	parameter download into module
LED Green / On	module scan terminated, everything OK

Flashing slowly = 1/s; flashing fast = 2/s

Output signals K1...K4 (yellow):

LED off	output signal is equal to zero
LED on	output signal is greater than zero

Specifications

Power supply	
Supply voltage:	24 VAC ± 10 %,
Current consumption:	308 mA max.
EIB voltage:	24 VDC (+8 V / -3 V)
EIB power consumption:	150 mW typ.
Ambient temperature:	-5 °C to +45 °C
Storage/transport temperature:	-25 °C to +70 °C
Humidity Ambient/storage/transport:	93 % RH max., no condensation
Protective system:	IP 20 as per DIN EN 60529
Installation width:	4 pitch / 70 mm
Weight:	approx. 180 g

Connections	
Inputs, power supply:	screw terminals:
single-wire	0.5 mm^2 to 4 mm^2
stranded wire (without ferrule)	0.34 mm^2 to 4 mm^2
stranded wire (with ferrule)	0.14 mm^2 to 2.5 mm^2
instabus EIB:	connecting and branch terminal
Analog actuator module:	6-pole system connector

Analog outputs	
number	4
ranges	0...1 V, 0...10 V, 0...20 mA, 4...20 mA
voltage signal load	>1 kΩ
current signal load	< 500 Ω

Analog actuator module supply:	24 V DC via system bus max. 80 mA

Subject to technical modifications.

Veiligheidsinstructies

Attentie!·
Inbouw en montage van elektrische apparaten mogen uitsluitend door een landelijk erkend installatiebedrijf worden uitgevoerd! Daarbij de geldende ongevallenpreventievoorschriften naleven. ·
Bij veronachtzaming van de installatie-instructies kunnen brand of andere gevaren optreden.·
Het gebruik van andere dan de door Merten goedgekeurde verbindingsleidingen is verboden en kan de elektrische veiligheid alsmede de functionaliteit van het systeem negatief beïnvloeden.

Sluit geen elektronische voorschakelapparaten of elektronische trafo's met 1-10 V-stuuringang aan op de uitgangen! ·
Sluit geen externe spanningen op de uitgangen aan. Aangesloten componenten moeten veilig van andere spanningen zijn gescheiden.·
Verbind de klemmen GND niet met de gelijknamige klemmen van een analoog uitgangsmoduul (gevaar voor vernieling!)

Systeeminformatie

Dit apparaat is een product van het instabus-KNX/EIB-systeem en voldoet aan de KNX-richtlijnen. Voor een goed begrip is gedetailleerde vakkennis door instabus-scholing een eerste vereiste. De werking van het apparaat is van de gebruikte software afhankelijk. Gedetailleerde informatie over de software die kan worden geladen en de functies die hiermee mogelijk zijn, alsmede informatie over de software zelf, vindt u in de productdatabase van de fabrikant.Planning, installatie en inbedrijfstelling van het apparaat geschieden met behulp van door de KNX-gecertificeerde software. De productdatabase en de technische beschrijvingen vindt u steeds actueel op internet onder www.merten.de

Functie

- Het analoge EIB actor heeft 4 analoge uitgangen en zet KNX/EIB-radiogrammen (1-byte- en 2-byte-) in analoge uitgangssignalen om. ·
- Via deze analoge uitgangssignalen zijn de actors van het verwarmings-, airco- en ventilatiesysteem in staat, hun uitgangswaarden op basis van businformatie aan te passen en aan regelprocessen deel te nemen.·
- De uitgangen worden softwarematig op spannings- of stroomsignalen geparametriseerd.
  Spanningsuitgangen: 0...1 V, 0..0,10 V
  Stroomuitgangen: 0...20 mA 4...20 mA·
- Spanningsuitgangen worden op kortsluiting bewaakt.·
- De uitgangstoestand wordt door Status-LEDs gesignaleerd

- Met behulp van het analoge actormoduul 4-kanaals, art.-nr. 682292, kan het aantal analoge uitgangen met 4 naar 8 worden uitgebreid. Aansluiting geschiedt via een systeemstekker.·
- De uitgangswaarden kunnen gedwongen aangestuurd worden. ·
- Niet benodigde uitgangen kunnen worden afgeschakeld.

Montage

Veiligheidsinstructie
Het gebruik van andere dan de door Merten goedgekeurde verbindingsleidingen is verboden en kan de elektrische veiligheid alsmede de functionaliteit van het systeem negatief beïnvloeden.
Aansluiting van een analoog uitgangsmoduul geschiedt uitsluitend met een 6-polige systeemstekker (bij analoog uitgangsmoduul bijgeleverd.

Vastklikken op DIN-rail 35 x 7,5 mm conform DIN EN 50022.

Het analoge EIB-actormoduul werkt op een externe 24-V-voedingsspanning, b.v. voeding REG, AC 24 V/1 A, art.-nr. 663629. Deze kan ook een aangesloten analoog actormoduul of overige toestellen voeden.

Voor comfortabele aansluiting zijn de klemmen voor de voeding dubbel uitgevoerd en intern met elkaar verbonden (gemarkeerd door een stip).

Aansluitbare analoge actors

Sluit geen elektronische voorschakelapparaten of elektronische trafo's met 1-10 V-stuuringang aan op de uitgangen!·
Sluit geen externe spanningen aan op de uitgangen. Aangesloten componenten moeten veilig van andere spanningen zijn gescheiden
De klemmen GND mogen niet met de gelijknamige klemmen van een analoog actormoduul worden verbonden (gevaar voor vernieling).

- Stroomuitgangen mogen met max. 500 Ω worden belast.·

- Spanningsuitgangen moeten met min. 1 kΩ worden belast.·
- De klemmen GND van de uitgangen K1...K4 zijn intern met elkaar verbonden.·
- Bij kortsluiting van een spanningsuitgang tussen K1...K4 en GND wordt de desbetreffende uitgang afgeschakeld.

Aansluiting, bedieningselementen (afbeelding ❶)

GND	Referentiepotentiaal voor uitgangen K1...K4
K1 ... K4	Analoge uitgangen
KNX/EIB	KNX/EIB-aansluitklem
24 V AC	externe voeding
(A)	Analoge actorsToestellen met analoge interface b.v. analoge actuators etc.

(B)	status-LED, driekleurig (rood, oranje, groen)
(C)	Status-LED van de vier analoge uitgangen (geel)
(D)	programmeer-LED
(E)	programmeer-toets
(F)	Systeemconnector, 6-polig voor aansluiting van een analoog actormoduul

Installatie van een analoog actormoduul

Bij installatie van een analoog actormoduul de volgende basisregels in acht nemen:

- Er kan max. één analoog actormoduul worden aangesloten.
- Vervanging van een uitbreidingsmoduul door een moduul van hetzelfde type - b.v. bij een defect - kan tijdens bedrijf van het systeem geschieden (moduul spanningvrij schakelen!). Na vervanging voert de analoge actor na ca. 25 s een reset uit. Daardoor worden alle uitgangen zowel van de analoge actor als van de aangesloten modules opnieuw geïnitialiseerd en in de oorspronkelijke toestand teruggezet.
- Verwijdering of toevoeging van modules zonder aanpassing van de configuratie en aansluitend downloaden naar de analoge actor is niet toegestaan, omdat dit functiestoringen in het systeem veroorzaakt.

Inbedrijfstelling

Na de eerste inschakeling voert de analoge actor een moduul-scan uit (status-LED: "Oranje / Aan"). Omdat een nieuw toestel standaard niet geconfigureerd is, schakelt de status-LED vervolgens op "Rood / Knippert snel".
Een aangesloten analoog actormoduul signaleert zijn bedrijfsgereedheid, doordat zijn status-LED op "Snel knipperend" schakelt.
Nadat een configuratie naar de analoge actor is geladen, schakelt de status-LED op "Groen / Aan"; het moduul schakelt zijn status-LED uit.

Status-LED

Toestelstatus (driekleurig (rood, oranje, groen)

Uit	geen voedingsspanning
Oranje / Aan	moduul-scan door analoog actor
Oranje / knippert snel	scan analoog actormoduul
Rood / knippert langzaam	fout: Onderspanning op moduulaansluiting
Rood / knippert snel	fout: geen configuratie / fout in parametrisering,
Groen / knippert langzaam	Adrestoewijzing, moduul-scan voltooid, configuratie OK
LED groen / knippert snel	Parameters worden naar het moduul gedownload

LED groen / Aan	moduul-scan voltooid, alles OK

Langzaam knipperend = 1/s; Snel knipperend = 2/s

Uitgangssignalen K1...K4 (geel):

LED Uit	Uitgangssignaal is gelijk aan nul

Technische gegevens

Voeding

Voedingsspanning:	24 V AC ±10 %,
Stroomopname:	max. 250 mA
Spanning EIB:	24 V DC (+8 V / -3 V)
Vermogensopname EIB:	typ. 308 mW
Omgevingstemperatuur:	-5 °C tot +45 °C
Opslag-/Transport-temperatuur:	-25 °C tot +70 °C
Vochtigheid Omgeving/ Opslag/Transport:	max. 93% rel. vo., geen vochtcondensatie
Beveiligingsgraad:	IP 20 conform DIN EN 60529
Inbouwbreedte:	4 moduul pitches / 70 mm
Gewicht:	ca. 180 g

Aansluitingen

Ingangen, voeding:	schroefklemmen
enkeldraads	0,5 mm^2 - 4mm^2
fijndraads (zonder draadhuls)	0,34 mm^2 - 4 mm^2
fijndraads (met draadhuls)	0,14 mm^2 - 2,5 mm^2
instabus EIB:	aansluit- en aftakklem
analoog actormoduul :	6-pol. systeemstekker

Analoge uitgangen

Aantal	4
Gebieden	0...1 V, 0...10 V, 0...20 mA, 4...20 mA
Belastingsweerstand spanningssignalen	>1 kΩ
Belastingsweerstand stroomsignalen	< 500 Ω
Voeding analoog actormoduul	24 V DC via systeembus max. 80 mA

Technische wijzigingen voorbehouden.

Indicaciones de seguridad

¡Atención! ·
La instalación y el montaje de aparatos eléctricos solamente debe efectuar un electricista formado. El mismo ha de observar durante los trabajos mencionados las vigentes prescripciones preventivas de accidentes.
En caso de no observar las instrucciones de instalación existe peligro de incendios o de otros peligros.
No está permitido el uso de cables de conexión que no están admitidos por Merten. El uso de cables no admitidos puede repercutir negativamente en la seguridad eléctrica y en la funcionalidad del sistema.

·¡No conecte balastos electrónicos ni transformadores electrónicos que cuentan con una entrada de control 1-10 V a las salidas! ·
No conecte tensiones externas a las salidas. Los componentes conectados deben garantizar una separación segura de otras tensiones.·
No conecte los bornes GND con los bornes del nombre igual de un Módulo de actuador analógico (¡peligro de destrucción!).

Información de sistema

El equipo presente es un producto del sistema instabus KNX/EIB y cumple las directivas KNX. Para poder comprender el sistema se presuponen conocimientos especiales detallados adquiridos en medidas de capacitación instabus.
El funcionamiento del aparato depende del software. Consulte la base de datos de productos del fabricante para recibir información detallada de qué software puede cargarse y cuál será el funcionamiento que se puede lograr por tal software, así como para recibir el software mismo.
La planificación, la instalación y la puesta en funcionamiento del aparato se llevan a cabo con la ayuda de un software KNX certificado.
La base de datos de productos así como las descripciones técnicas más actuales se encuentran en internet en www.merten.de.

Funcionamiento

- El actuador analógico EIB cuenta con 4 salidas analógicas y convierte telegramas KNX/EIB (1 byte y 2 byte) en señales analógicas de salida. ·
- Dichas señales analógicas de salida hacen posible para actuadores de la técnica de calefacción, climatización y ventilación adaptar sus magnitudes de salida a base de informaciones de bus y participar en procesos de regulación.·
- Las salidas se parametrizan por el software a señales de tensión o de corriente.
  Salidas de tensión: 0...1 V, 0...10 V
  Salidas de corriente: 0...20 mA 4...20 mA·
- Se vigilan las salidas de corriente con respecto a cortocircuito.·
- El estado de la salida se indica por LED de estado.

- Por medio del módulo de actuador analógico, 4 canales, n° de art. 682292, se puede ampliar el número de las salidas analógicas de 4 a 8. La conexión se efectúa por un enchufe de sistema.·
- Las magnitudes de salida pueden guiarse forzadamente. ·
- Las salidas no necesarias pueden desconectarse.

Montaje

Indicación de seguridad
No está permitido el uso de cables de conexión que no están admitidos por Merten El uso de cables no admitidos puede repercutir negativamente en la seguridad eléctrica y en la funcionalidad del sistema
La conexión de un módulo de salida analógica se realiza exclusivamente por un enchufe

de sistema de 6 polos (está adjunto al módulo de salida analógica).

Montar a presión en carril omega 35 x 7,5 mm según DIN EN 50022.

El actuador analógico EIB necesita una alimentación de tensión 24 V externa, por ejemplo, bloque de alimentación REG, AC 24 V/1 A, n° de art. 663629. Dicho aparato puede también alimentar un módulo de salida analógica conectada u otros aparatos.

Para una conexión confortable existen los bornes para la alimentación de tensión en versión doble. Van conectados internamente entre sí (marcación por punto).

Actuadores analógicos conectables

¡No conecte balastos electrónicos ni transformadores electrónicos que cuentan con una entrada de control 1-10 V a las salidas!·
No conecte tensiones externas a las salidas. Los componentes conectados deben garantizar una separación segura a otras tensiones.
No conecte los bornes GND con los bornes del nombre igual de un módulo de actuador analógico (¡peligro de destrucción!).

- Las salidas de corriente deben cargarse como máximo con 500 Ω.·
- Las salidas de tensión deben cargarse como mínimo con 1 kΩ.·
- Los bornes GND de las salidas K1...K4 están conectados internamente entre sí.·

- En caso de un cortocircuito de una salida de tensión entre K1...K4 y GND se desconecta la respectiva salida.

Conexión, elementos de mando (figura ❶)

GND	potencial de referencia para salidas K1...K4
K1 ... K4	salidas analógicas
KNX/EIB	borne de conexión KNX/EIB
24 V AC	tensión de alimentación externa
(A)	actuadores analógicosaparatos con interfaz analógicapor ejemplo, elementos de ajuste analógicos etc.
(B)	LED de estado, de tres colores (rojo, naranja, verde)
(C)	LED de estado de las 4 salidas analógicas

(D)	LED de programación
(E)	tecla de programación
(F)	conector de sistema, 6 polos, para conectar un módulo de actuador analógico

Instalación de un módulo de actuador analógico

Al instalar un módulo de actuador analógico deben observarse las reglas básicas siguientes:·

- Puede conectarse como máximo un módulo de actuador analógico.·
- La sustitución de un módulo de ampliación por un módulo del mismo tipo - por ejemplo, en caso de un defecto - se puede realizar durante el servicio activo del sistema (¡desconectar el módulo de la tensión!). Realizada la sustitución, el actuador analógico efectúa un reset después de unos 25 s. Así se inicializan nu-

evamente todas las salidas del actuador analógico y de los módulos conectados y los ponen en el estado inicial. ·
- No está admitido quitar o añadir módulos sin adaptar la proyección y la descarga siguiente al actuador analógico, puesto que eso provoca funciones erróneas del sistema.

Puesta en funcionamiento

Realizada la primera conexión, el actuador analógico efectúa un escaneo de módulos (LED de estado: "naranja/con."). Ya que un equipo nuevo, como estándar, no cuenta con un proyecto, el LED de estado a continuación conmuta a "rojo/destellos rápidos".

Un módulo de actuador analógico conectado señaliza su disposición al servicio conmutando el LED de estado a "destellos rápidos".

Una vez cargado un proyecto al actuador analógico, el LED de estado conmuta a "verde/con."; el módulo apaga su LED de estado.

LED de estado

Estado del aparato (de tres colores: rojo, naranja, verde)

Apagado	ninguna alimentación de tensión
Naranja/con.	escaneo de módulos por actuador analógico
Naranja/ destellos rápidos	escaneo del módulo de actuador analógico
Rojo/destellos lentos	error: baja tensión en la conexión de módulo
Rojo/destellos rápidos	error: ningún proyecto/error en la parametrización
Verde/destellos lentos	distribución de direcciones, escán de módulos terminado, proyección OK
LED verde/destellos rápidos	descarga de parámetros al módulo

LED verde/con.	escaneo de módulos terminado, todo OK

Destellos lentos = 1/s; destellos rápidos = 2/s

Señales de salida K1...K4 (amarillo):

LED apagado	señal de salida es igual a cero
LED encendido	señal de salida es más grande que cero

Datos técnicos

Alimentación

Tensión de alimentación:	24 V AC ±10 %,
Absorción de corriente:	máx. 250 mA
Tensión EIB:	24 V DC (+8 V / -3 V)
Potencia absorbida EIB:	típ. 308 mW
Temperatura ambiente:	-5 °C a +45 °C
Temperatura de almacenamiento/transporte:	25 °C a +70 °C
Humedad Ambiente/almacenamiento/ transporte:	máx. 93 % humedad rel., sin rociado
Grado de protección:	IP 20 según DIN EN 60 529
Anchura de instalación:	4 módulos / 70 mm
Peso:	aprox. 180 g

Conexiones

Entradas, alimentación:	bornes roscados
de un hilo	0,5 mm² a 4 mm²
de hilo fino (sin terminal de conductor)	0,34 mm² a 4 mm²
de hilo fino (con terminal de conductor)	0,14 mm² a 2,5 mm²
instabus EIB:	borne de conexión y derivación
módulo de actuador analógico:	enchufe de sistema de 6 polos

Salidas analógicas

Número	4
Márgenes	0...1 V, 0...10 V, 0...20 mA, 4...20 mA
Carga aparente,	señales de tensión: >1 kΩ
Carga aparente,	señales de corriente: <500 Ω

Alimentación módulo de actuador analógico	24 V DC por bus de sistema máx. 80 mA

Reservadas modificaciones técnicas.

Application: B008

Executable from mask version: 7.1
Number of addresses (max): 200 **dynamic table handling** Yes ☒ No ☐
Number of assignments (max): 200 **maximum lenght of table** 200

Communication objects 58

Object no.		Function	Name	DP type	Format	Flags
	0 … 3	Analog output	Input value output 1 … 4	9.0xx	2 bytes	C, W, T
	0 … 3	Analog output	Input value output 1 … 4	5.001	1 byte	C, W, T
	4 … 7	Analog output	Status output 1 … 4	9.0xx	2 bytes	C, R, T
	4 … 7	Analog output	Status output 1 … 4	5.001	1 byte	C, R, T
	8 … 15	Analog output	Forced control 1 / 2 output 1 … 4	1.001	1 bit	C, W, T
	16 … 19	Analog output	Switching output 1 … 4	1.001	1 bit	C, W, T
	20 … 23	Analog output	Dimming output 1 … 4	3.007	4 bits	C, W, T
	24 … 27	Analog output	Alarm output 1 … 4	1.001	1 bit	C, R, T
	29 … 32	Extension module	Input value output 5 … 8	9.0xx	2 bytes	C, W, T
	29 … 32	Extension module	Input value output 5 … 8	5.001	1 byte	C, W, T
	33 … 36	Extension module	Status output 5 … 8	9.0xx	2 bytes	C, R, T
	33 … 36	Extension module	Status output 5 … 8	5.001	1 byte	C, R, T
	37 … 44	Extension module	Forced control 1 / 2 output 5 … 8	1.001	1 bit	C, W, T
	45 … 48	Extension module	Switching output 5 … 8	1.001	1 bit	C, W, T
	49 … 52	Extension module	Dimming output 5 … 8	3.007	4 bits	C, W, T
	53 … 56	Extension module	Alarm output 5 … 8	1.001	1 bit	C, R, T
	57	Extension module	Alarm	1.001	1 bit	C, R, T

[1] The type of the objects depends on the setting of the "Input format" parameter.

[2] The objects of an output are visible only if the "Input format" parameter is set to "8 bits".

[3] The "Forced control" objects of an output are visible only if the "Forced control object" parameter is set to "Forced control active with...".

[4] The objects can receive either 8-bit or 16-bit values.

[5] Objects are visible only if the "Extension module present" parameter is set to "Yes".

Object description			
	0 … 3, 29 … 32	Input value output …	1-byte or 2-byte objects which can be used for presetting the output. In the 1-byte mode, a new input value can be adopted by the direct or by the dimming approach. The input object can be monitored during a specified time. (see also the object "Alarm output …")
	4 … 7 33 … 36	Status output …	1-byte object or 2-byte object for outputting of the actual ouput value.
	8 … 15 37 … 44	Forced control 1/2 output…	1-bit objects which can be used to switch the output by forced control to a parameterized value. After deactivation of the forced control mode , the output adopts the previous value. When both, forced copntrol 1 and force control 2 are active, forced control 1 has priority. The forced control objects can be monitored during a specified time. (see also the object "Alarm output …")
	16 … 19 45 … 48	Switching output …	1-bit objects which can be used to switch the output on (100%) or off. This object can be connected, for instance, with the 1-bit object of a dimming key. The object is available in the 8-bit mode only. When cyclical monitoring of the input value is active, the switching object is not monitored.
	20 …23 49 … 52	Dimming output …	4-bit object which can be used to increase / decrease the ouput value continuously with a dimming key. The dimming speed is presettable. As per the KNX standard "Brightness increase" is possible and "Brightness reduction" is not possible. When cyclical monitoring of the input value is active, the dimming object is not monitored.
	14 … 27 53 … 56	Alarm output …	1-bit object which is being set when the output is overloaded (output current exceeding 10 mA) in the 0 … 1 V or 0 … 10 V modes, or when the monitoring time has elapsed in case cyclical monitoring of the communication objects "Input value" and/or "Forced control..." is active.

1 Basic function

The analog output / analog actuator is designed to convert physical quantities (2 bytes) or relative values (1 byte) into analog voltages (0 … 1 V, 0 … 10 V) or currents (0 … 20 mA, 4 … 20 mA). This property can be used, for instance, to integrate HVAC components such as actuating drives for ventilation shutters or other devices into the KNX system.

In the basic setting, the outputs are shut off ("no function"). The parameter "Signal output..." can be used to select the desired voltage or current signal separately for each output. When an output is activated, the ETS displays further parameters and communication objects. An active output has an "Input value" and a "Status" communication object and – depending on its parameters – also further communication objects.

Each active output has the two parameter pages "Output … 1/2" and "Output … 2/2". The first of these parameter pages defines the desired input format (16-bit or 8-bit) and the response after a reset.

8-bit values can be used by a large number of KNX devices, but their resolution is limited. 16-bit values offer high resloution and very high flexibility in adapting themselves to the respective system function. They do require, however, a greater single effort in the elaboration of the parameters.

The second parameter page permits using forced-control objects for higher-priority control, time monitoring of the input objects and a dimming function when relative values are used (1-byte object).

2 Use of 16-bit values

Only in very few technical applications is the full range of values of the 2-byte floating point format really needed. On the other hand, there is a large variety of components converting a general analog value such as voltage or current with their own inherent conversion factor into the most different kinds of physical quantities.

To enable a simple and general conversion, the ETS displays three parameters, when the input format of an output is set to the "16-bit" format. These parameters are used to convert the input value in the 2-byte floating point format into the corresponding output signal.

The two parameters "Input value for 0% output value" and "Input value for 100% output value" are preset in such a way that – together with the common parameter "Factor of the input value" – they cover the desired range of values as fully as possible. For an internal resolution as high as as possible, a small factor should be chosen.

Examples:
To obtain a direct conversion of the input value into volts with an output signal of 0 … 10 V, the following parameters are recommended:

Input value for 0%:	0
Input value for 100%:	1000
Factor of input value:	0.01

To obtain a conversion of the input value into millivolts with an output signal of 0 … 10 V, the following parameters are recommended:

Input value for 0%:	0
Input value for 100%:	10000
Factor of input value:	1

In order to be able to use the angle directly as default value in case of a ventilation shutter drive with a mechanical actuation angle of 0 … 90° and an input voltage of 0 … 10 V, the following parameters are recommended:

Input value for 0%:	0
Input value for 100%:	9000
Factor of input value:	0.01

The same conversion in reverse is performed by the actuator for the communication object "Status". The status object transmits the new value in the following situations:

- When the object "Input value" has been assigned a new value different from the actual output value.
- When the output has adopted a new value because a higher priority command has been activated or deactivated by a "Forced control" object.
- When the output has received a new input telegram, which it does not execute because a forced control is active.
  Example
  The output is set to 9 volts by forced control. The "Input value" objects receives a value of 5 volts. This value is not adopted because of the forced control condition. The status object reports 9 volts. The new input value of 5 volts is internally stored and output when the forced control condition has ended. The status object reports 5 volts.
- When the monitoring time for the communication objects "Input value" and/or "Forced control" has elapsed.

3 Use of 8-bit values

When 8-bit values are used, the parameters "Input value for 0%", "Input value for 100%" and "Factor of the input value" are fixed and cannot be changed. The communication objects "Input value" and "Status" therefore correspond to datapoint type 5.001.

3.1 Dimming actuator function

When the format of the input object is set to "8-bit", the ETS displays in addition a 1-bit communication object and a 4-bit communication object for this output. With these objects, the output can be controlled by every touch sensor with a dimming function.

The 1-bit object "Switching" can be used to switch the output optionally on or off. When switched on, the output value adopts 100%.

With the 4-bit object, the output can be dimmed in accordance with datapoint type 3.007. The dimming speed depends on the two parameters "Time between 2 of 255 dimming steps, basis" and "Time between 2 of 255 dimming steps, factor". By default, the time for the range from 0% to 100% is approximately 5 seconds. The shortest time is about 2.5 seconds and the longest about 65,000 seconds (which corresponds to 1083 minutes or about 18 hours).

Depending on the parameter "Response to receiving a value", the output adopts a new value received via the 1-byte object either immediately ("direct approach") or it uses the same dimming speed as in case of control by the 4-bit object (dimming approach").

When the output receives a new value which is to be taken over by the dimming approach, the status object transmits the new value immediately after reception of the input telegram. In case of control via the 4-bit object, the status object transmits the new value when the dimming cycle is terminated.

4 Forced control

In the 8-bit and also in the 16-bit mode of operation, each output still has up to two communication objects permitting higher-priority control. In order to make use of these objects, the corresponding parameters "Forced-control object..." must be preset. In the basic configuration, these parameters are set to "non existing". For this reason, the ETS does not show these communication objects.

Forced control can be active, when the object value is either "1" or "0". The parameter "Output value with forced control" is then used to set a fixed value for the active state. When the "Forced control" object becomes inactive thereafter, the output automatically readopts the value that corresponds to the "Input value" object.

When both "Forced control" objects are active, the "Forced control 1" object internally has priority over the "Forced control 2" object.

5 Cyclical monitoring

In order to ensure that there is no output control failure, the actuator can monitor during a predefined time the input and / or the forced control mode for each of its outputs. In 8-bit operation, the communication objects "Switching" and "Dimming" are not monitored.

When this monitoring mode is activated, a time between 10 seconds and 2550 seconds (= 42.5 minutes) can be preset. If none of the communication objects receives a telegram during this time, the output adopts the value which can be defined in the parameter "Output value after end of monitoring cycle". With the communication object "Alarm output …", the output can additionally issue a message.

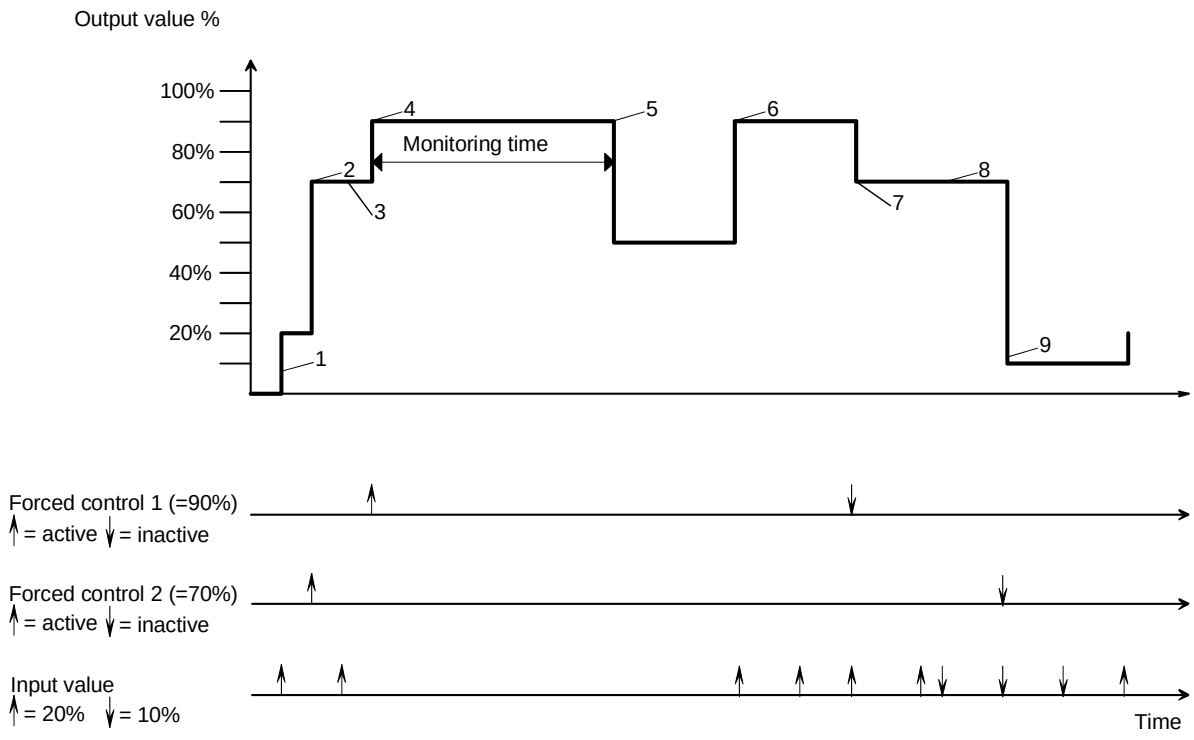

The diagram above shows the interaction of the communication objects "Input value" and "Forced control" in conjunction with a monitoring cycle. The arrows indicate the time when a telegram is transmitted.

1. When forced control is inactive, the state of the output is determined by the object "Input value".
2. When "Forced control 2" becomes active, the output adopts the parameterized value (in this case: 70%).
3. Telegrams addressed to the "Input value" object are not executed. Their value is, however, stored internally.
4. If activated, "Forced control 1" has higher priority (in this case: 90%).
5. When the monitoring time is exceeded, the output goes to the alarm state (n this case: 50%).
6. A new telegram addressed to the "Input value" object ends the alarm state. "Forced control 1" is again active.
7. When "Forced control 1" is terminated, "Forced control 2" is again active.
8. Interim changes of the "Input value" object are internally stored, but not executed.
9. When the forced-control state ends, the internally stored input value will be reactivated.

6 Connection with an analog output module / analog actuator module

The analog output module / analog actuator module permits doubling the number of outputs from 4 to 8.

6.1 Settings of the analog output module / analog actuator module

For the four channels of the analog output module / analog actuator module, the software offers the same settings as are applicable for the four inputs of the analog output / analog actuator.

In order to be able to use the extension module, the parameter "Extension module connected" on the general parameter page is to set to "Yes". The ETS will then show the corresponding parameters and communication objects as is the case for the outputs of the analog output / analog actuator.

Besides the communication objects "Alarm output …" of the individual channels, the analog output module / analog actuator module has another alarm communication object which sends a telegram of value "1" when the 24 V AC supply of the extension module fails. On return of the supply, the alarm is reset.

6.2 Electrical connection

When installing an analog output module / analog actuator module, the following points must be observed:

- Only one extension module can be connected to the device.
- The connection between the analog output / analog actuator and the extension module must be made only with the system connector supplied with the device.
- An analog output module / analog actuator module can be replaced (e.g. in case of defect) while the system is in operation (disconnect the voltage supply from the module). After the replacement, the analog output / analog actuator makes a reset after abt. 25 s. This action re-initializes all outputs and resets them to their original state.
- Removal or addition of modules without adapting the project and subsequent downloading into the analog output / analog actuator is not permitted as this will result in system malfunctions.
- The GND terminals of the analog output module / analog actuator module must not be connected to the corresponding terminals of another device, e.g. the analog output / analog actuator.
- The outputs of the analog output / analog actuator and of the analog output module / analog actuator module must not be connected to the 1 … 10 V interface of electronic ballasts or electronic transformers.
- All connected components must ensure safe separation from other voltages.

7 Commissioning and initialization

The analog output / analog actuators is programmed with the ETS.

8 Status indication

After initial start-up, the analog output / analog actuator performs a module scan (status LED: "orange / on"). Since a new device contains generally no project, the status LED switches thereafter to "red / flashing fast".

A connected extension module signals its ready-for-operation state by switching its status LED to "Fast flashing".

After a project has been loaded into the analog output / analog actuator, the status LED switches to "Green / on". The module switches its status LEDF off.

Parameters		
Description	**Values**	**Remarks**
General parameters		
Signal output …	**No function** 0 … 10V 0 … 1V 0 … 20mA 4 … 20mA	Each output can either have no function or otherwise work optionally as voltage or current source. When the output has no function, its communication objects and further parameters are hidden. When it is in use, the program displays two additional parameter pages for the output.
Extension module existing	**No** Yes	This parameter enables the alarm communication object and permits access to the parameters for the outputs 5 to 8
Output … 1/2		
Input format	**16-bit** 8-bit	Depending on this parameter, different communication objects are displayed for the input values and the status output. In the 8-bit mode, the output also has a 1-bit object and a 4-bit object. With these objects, it can work like a KNX dimming actuator.
Input format = 16-bit		
Input value for 0% output value Input value for 100% output value Factor of input value	-32768 … **0** … 32767 -32768 … **100** … 32767 **Input value * 0.01** Input value * 0.1 Input value * 1 Input value * 10 Input value * 100	The three parameters "Input value for 0%", "Input value for 100%" and "Factor of output value" can be used for adapting the output characteristics of the actuator to different input values. In order to achieve an internal resolution as high as possible, the two input values should be chosen such that they easily cover the desired range with a factor as small as possible.
Input format = 8-bit		
Input value for 0% output value Input value for 100% output value	**0** **255**	In the 8-bit mode, the range of input values is fixed. The function of the output corresponds in this case to the KNX standard for dimming actuators.
Input format = 8-bit or 16-bit		
Output value after initialization in % (0 … 100)	**0** … 100	Independent of the size of the input objects, this parameter fixes the output value during an initialization, for instance, after re-programming.

Response to bus voltage failure Output value in % (0 … 100)	**Last value** Output value in % **0**	When the supply voltage is present, the output can - in the event of bus voltage failure - either retain the last value or otherwise be set to a fixed vlaue. In this case, an additional parameter is displayed.
Response on return of bus voltage	**No response** State of initialization State as before bus voltage failure	On return of bus voltage, the output can optionally retain its actual value, preset the fixed initialization value or restore the condition existing before bus voltage failure.
Input object request on new start	**No** Yes	When this parameter is set to "Yes", the output can send a read request to the transmitting group address. Thereafter it sets its output to the value received as an answer to the request.
Output… 2/2		
Forced control object 1 (2)	**Not existing** Forced control active at "1" telegram Forced control active at "0" telegram	The two forced control objects permit controlling the output with a higher priority than the 1-byte or the 2-byte input object. When this parameter is set to "Not existing", the ETS does not display the corresponding 1-bit object. When the object is in use, the parameter determines at which value of the object the forced control is active. When the forced control object is switched to inactive, the output adopts the value that corresponds to the object "Input value". If both forced control objects are active, forced control object 1 has the higher priority.
Output value in case of forced control 1(2) in %	0 … **50** … 100	This parameter determines the output value, if the corresponding forced control object is active.
Cyclical monitoring	**No monitoring** Input value Forced control Input value or forced control	The output can monitor the "Input value" object and / or the "Forced control" objects during a certain time. The non-reception of a telegram within the time defined hereafter is evaluated by the output as an error. In this case, the object "Alarm output …" can send a telegram with value 1 and the output adopts the value that is preset with the parameter "Output value after exceeding of the monitoring time".

Time factor for cylical monitoring (1 … 255, Base = 10 s)	**6**	Together with the fixed time base, this parameter determines the monitoring time of the output.
Output value after exceeding of the monitoring time in %	**0** … 100	On exceeding of the monitoring time, the output adopts this value.
Input format = 8-bit		
Time between 2 of 255 dimming steps - base Time between 2 of 255 dimming steps - factor (1 … 255)	**10 ms** **2**	In the 8-bit mode, these two parameters determine the dimming speed used by the output when controlled via the 4-bit object or when the following parameter is set to ""Dimming approach" and when the output has received a new input value.
Response on reception of value	**Direct approach** Dimming approach	In the dimming actuator mode, the output can adopt new 1-byte values either directly and immediately or approach them with the usual dimming speed.
Output x 1/2 like output 1 1/2		
Output x 2/2 like output 1 2/2		